ITEM NO.	PART NUMBER	QTY
1	2BZKF125AS	1
2	BZXH125WNY	1
3	AXLE KIT	
	TUBEM20X65X12	1
	WP20X40X2	6
	BOLTM12X160Z8.8	1
	NYLOCM12Z14MM	1

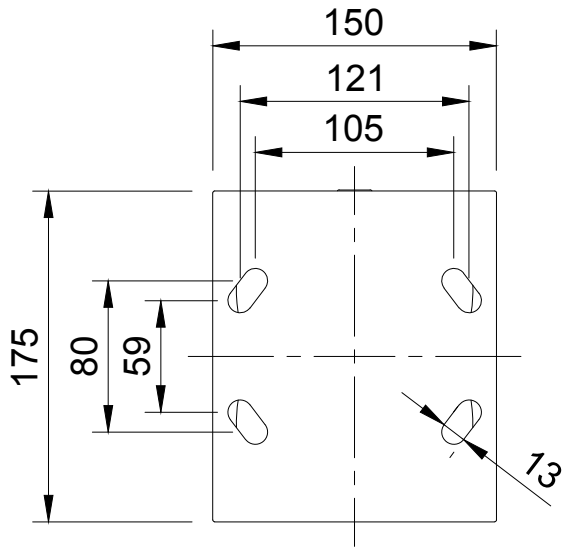

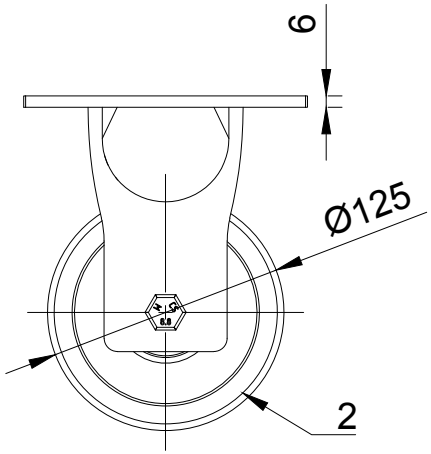

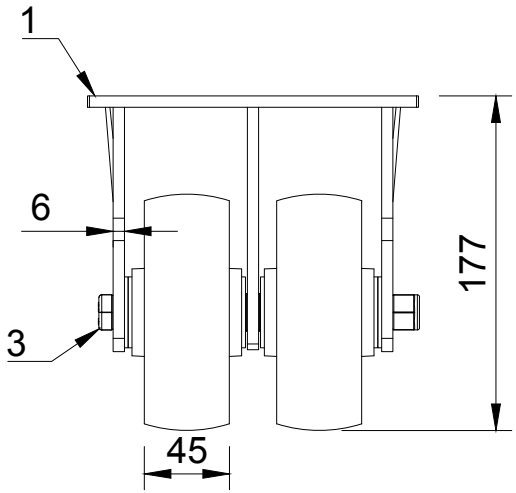

UNLESS OTHERWISE SPECIFIED DIMENSIONS ARE IN MILLIMETRES

Unspecified Tolerances
Machining ± 0.25mm
Fabrication ± 1mm

DRAWING DISCLAIMER

COPYRIGHT OF THIS DRAWING IS RESERVED BY BIL GROUP LTD. IT IS NOT REPRODUCED, COPIED, OR DISCLOSED TO A THIRD PARTY EITHER WHOLLY OR IN PART WITHOUT THE CONSENT IN WRITING OF BIL GROUP LTD

	NAME	DATE
DRAWN BY	Matt	18/11/26
APPROVED BY	Steven	18/11/26
SCALE	1:4	
WEIGHT	3.382kg	

BIL Group Ltd
Porte Marsh Road
Calne, Wiltshire, SN11 9BW
United Kingdom
Tel +44 (0)1249 822 222
www.bilgroup.co.uk

DWG NO. 2BZKF125NY

REV 1

2BZKF125NY

SHEET 1 OF 1