ITEM NO.	PART NUMBER	QTY
1	VULKOLLAN POLYURETHANE TYRE	1
2	CAST IRON CENTRE	1
3	BEARING6205	2
4	BEARING SPACER	1

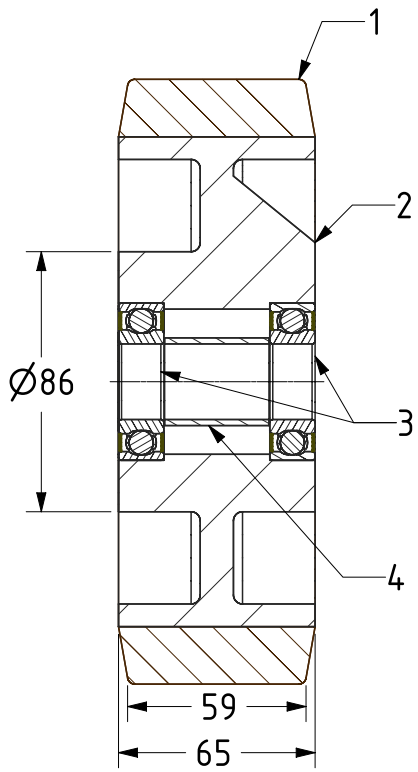

SECTION A-A

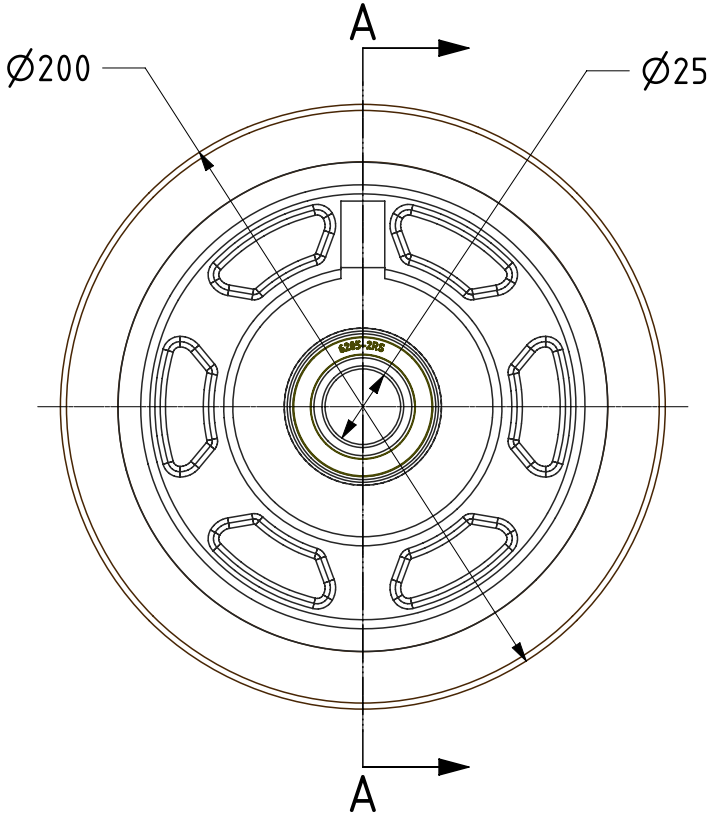

UNLESS OTHERWISE SPECIFIED
DIMENSIONS ARE IN MILLIMETRES

Unspecified Tolerances
Machining ± 0.25mm
Fabrication ± 1mm

DRAWING DISCLAIMER

COPYRIGHT OF THIS DRAWING IS RESERVED BY BIL GROUP LTD. IT IS ISSUED ON CONDITION THAT IT IS NOT REPRODUCED, COPIED, OR DISCLOSED TO A THIRD PARTY EITHER WHOLLY OR IN PART WITHOUT THE CONSENT IN WRITING OF BIL GROUP LTD.

	NAME	DATE
DRAWN	Matt	12/05/22
APPROVED BY	Kevin	12/05/22
SCALE	2:5	
WEIGHT	5.382kg	

BIL Group Ltd, Porte Marsh Road, Calne
Wiltshire, SN11 9BW, United Kingdom
Tel +44 (0)1249 822 222 Fax: +44 (0)1249 822 300
www.bilgroup.co.uk

DWG NO. BZH200WVPTM25BJ

REV 1

BZH200WVPTM25BJ

SHEET 1 OF 1